grindex

Dewatering AR-target

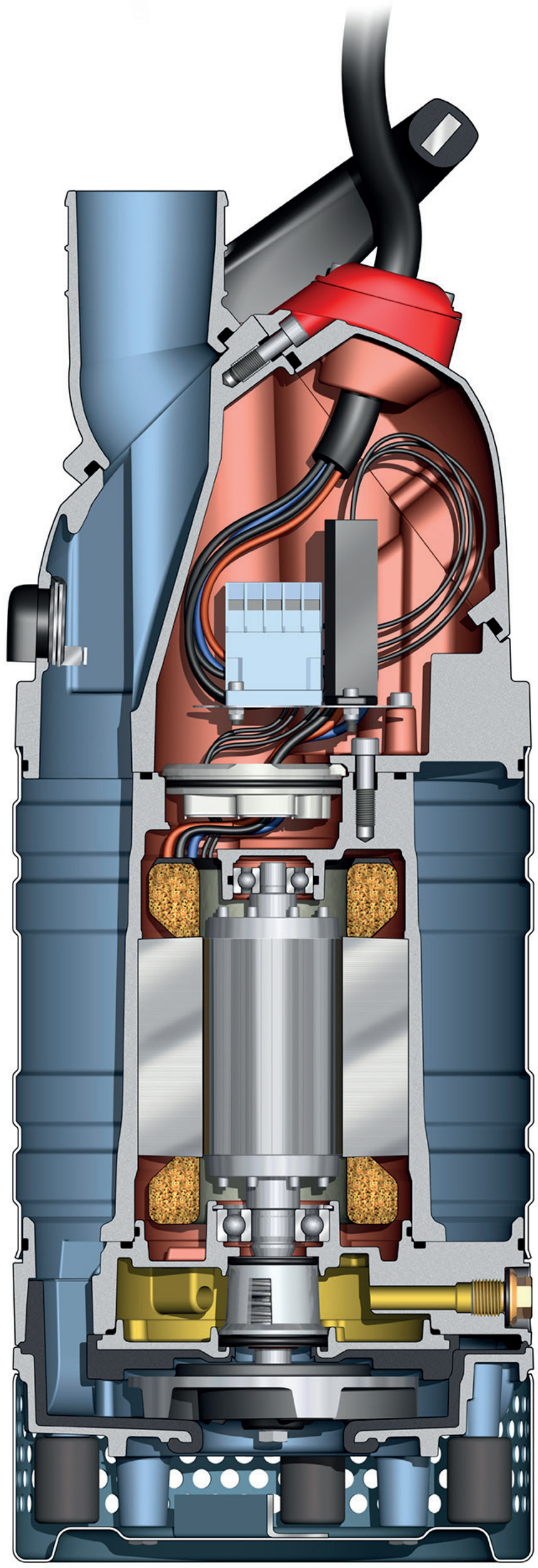

Grindex AB
Box 7025
SE- 174 07 Sundbyberg
Sweden

Phone: +46 8 606 6600
www.grindex.com

Grindex - Genuine Swedish Engineering since 1940